SELF Workshops

We help you to conduct Oscad SELF (Spoken Tutorial based Education and Learning through Free FOSS study) workshops free of cost.

Spoken tutorials on Oscad comprises of the following tutorials in the order mentioned below :

Beginner Level: Beginner level has a set of tutorials on Oscad and KiCad. The tutorials available under beginner level are given below.

1. Introduction to Oscad
2. Schematic Creation and Simulation using Oscad
3. Designing Circuit Schematic in KiCad
4. Designing Printed Circuit Board (PCB) using Oscad
5. Electric Rules Checking and Netlist Generation in KiCad
6. Mapping Components in KiCad
7. Designing Printed Circuit Board in KiCad

Advanced Level: Advanced level has tutorials on Oscad and Ngspice. The tutorials available under Advanced level are given below.

1. Operating Point Analysis in Ngspice
2. DC Sweep Analysis in Ngspice
3. Model Building using Oscad
4. Subcircuit Creation using Oscad

Book on Oscad

We have written a book, **'Oscad: An open source EDA tool for circuit design, simulation, analysis and PCB design'**, published by Shroff Publishers, Mumbai, 2013. It explains the installation and use of Oscad in detail, with lots of illustrative examples. An e-version of the book can be downloaded for non-commercial purposes from: http://oscad.in/downloads.

Future work

Integrating Oscad and OpenModelica	OpenModelica is a multi-domain modelling and simulation tool based on the Modelica language. Efforts are going on to integrate it with Oscad so that its powerful ODE/DAE solvers and optimisation algorithms can be used for circuit optimisation.
Digital Circuit Simulation	VHDL/Verilog are standard hardware description languages (HDL). One can create digital circuits by using VHDL/Verilog. An interface for digital circuit simulation using HDL, is being developed in Oscad.
PSpice to Oscad Conversion	Efforts are going on to migrate circuits created using PSpice® to Oscad.

Contact Us

Lab Migration	SELF workshops	Textbook Companion	General queries
lab-migration@oscad.in	SELF-workshop@oscad.in	textbook-companion@oscad.in	queries@oscad.in

We are looking for more FOSS enthusiasts to join our team. Contact us at jobs@fossee.in.

Oscad

A Free and Open Source alternative to OrCAD

Every resource mentioned in this brochure is available free of cost.

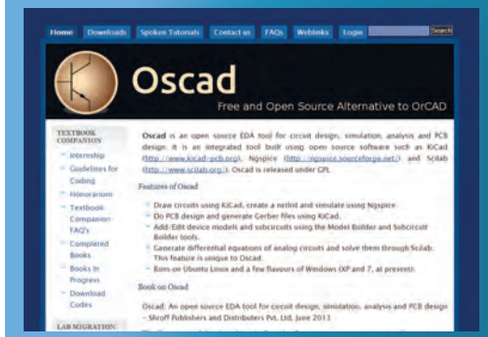

Oscad website

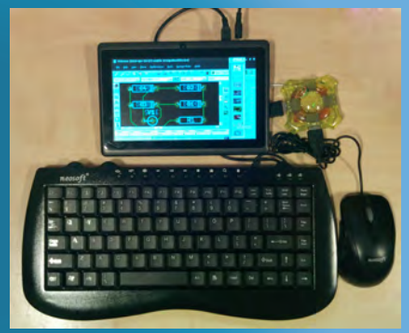

Oscad on Aakash

Oscad is an open source EDA tool for circuit design, simulation, analysis and PCB design, developed by the FOSSEE team at IIT Bombay. It is an integrated tool built using open source software such as KiCad (http://www.kicad-pcb.org), Ngspice (http://ngspice.sourceforge.net/), Scilab (http://www.scilab.org/) and Fritzing (http://fritzing.org/)

- It is released under GNU GPL license
- It runs on Ubuntu Linux, Windows XP and Windows 7
- Oscad has been successfully ported to Aakash, the world's lowest priced computing tablet

About Us

FOSSEE (Free and Open Source Software for Education) project is a part of the National Mission on Education through ICT with the thrust area being "Adaptation and deployment of open source simulation packages equivalent to proprietary software", funded by MHRD, based at the Indian Institute of Technology, Bombay (IITB).

For more details, visit http://fossee.in/

Other Projects under FOSSEE:

- Scilab
- Python
- OpenFOAM
- COIN-OR
- ASCEND

IIT Bombay

http://oscad.in

fossee better education

Funded by the National Mission on Education through ICT, MHRD, Govt. of India

Features

Create Circuit Schematic

- Generate netlists for simulation and PCB design
- Perform Electric Rules Check (ERC)
- Create new components using Library Editor

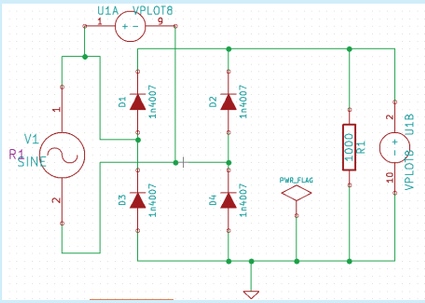

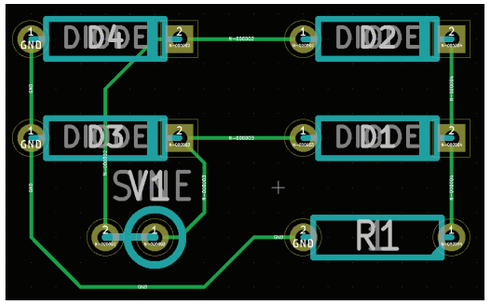

Create PCB Layout

- Lay tracks
- Modify the width of tracks
- Create multi-layer PCB designs
- Add/edit design rules
- Generate Gerber files

Perform Circuit Simulation

- Analog, digital and mixed signal circuit simulations
- Perform AC, DC, nested DC, Transient, Fourier and Pole-Zero analyses

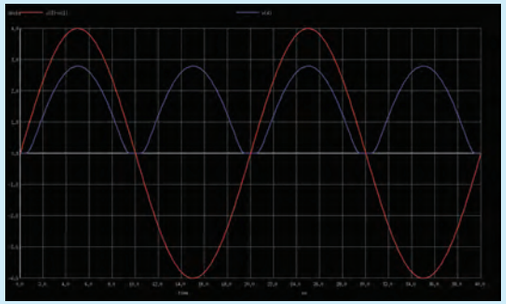

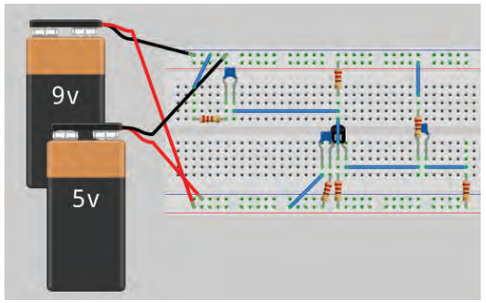

Breadboard Based Circuit Design and Simulation

- Design circuits using virtual breadboard and perform simulations
- Automatically generate circuit schematic and PCB layout for documentation

Advanced Features

Model Builder

- Create a new model for an electronic device
- Edit an existing model of an electronic device

Subcircuit Builder

- Create a new subcircuit
- Edit an existing subcircuit

Textbook Companion

Oscad textbook companion is one of the major activities supported by the Oscad team at FOSSEE, IIT Bombay. This work involves generating Oscad project files for all the solved simulation exercises present in standard Electrical and Electronics Engineering textbooks. Participate and earn attractive honorarium and Certificate of Internship from IIT Bombay.

Other advantages include:

- Download and use the simulations
- Available free of cost

Available Textbook Companions:

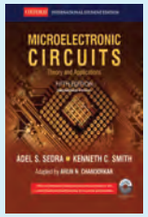

Microelectronic Circuits: Theory and Applications
(5th Edition)
by Adel S. Sedra, Kenneth C. Smith
Publisher: Oxford University Press

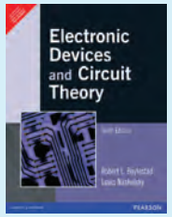

Electronic Devices And Circuit Theory
(10th Edition)
by Louis Nashelsky, Robert L. Boylestad
Publisher: Pearson

Lab Migration

Lab Migration is another major activity supported by the Oscad team at FOSSEE, IIT Bombay. It aims to migrate labs that use proprietary software (e.g. OrCAD, Pspice, etc) to a Free and Open Source Software (FOSS) only lab. The Lab Migration team, apart from providing suggestions and solutions to the problem statements, also coordinates the migration of the lab to FOSS only laboratory. Participate and earn attractive honorarium for your efforts.

Other advantages include:

- Save money and avoid software piracy by shifting to FOSS only lab
- Get free training from Oscad team through free workshops for faculty, students, and lab staff
- Labs that migrate first will receive a special mention on our website

How to participate?

Textbook Companion

- Create Oscad textbook companions for any standard books on electronic circuits
- Use Oscad Textbook Companion and give feedback

To know more, please visit:
http://oscad.in/textbook-companion-internship

Lab Migration

- Migrate Electronic/Electrical circuits labs in your college from proprietary CAD software to Oscad

To know more, please visit:
http://oscad.in/procedure-lab-migration